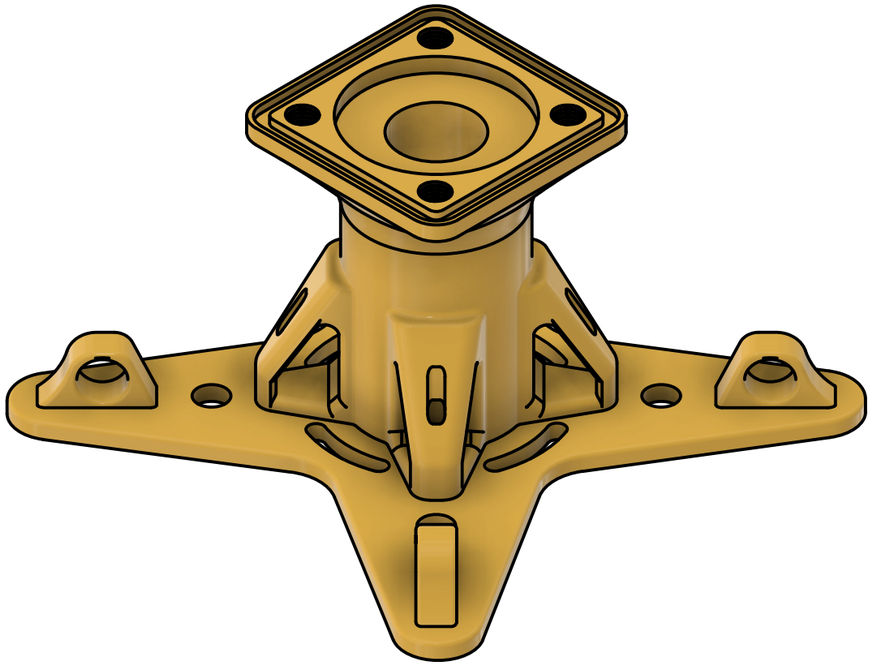

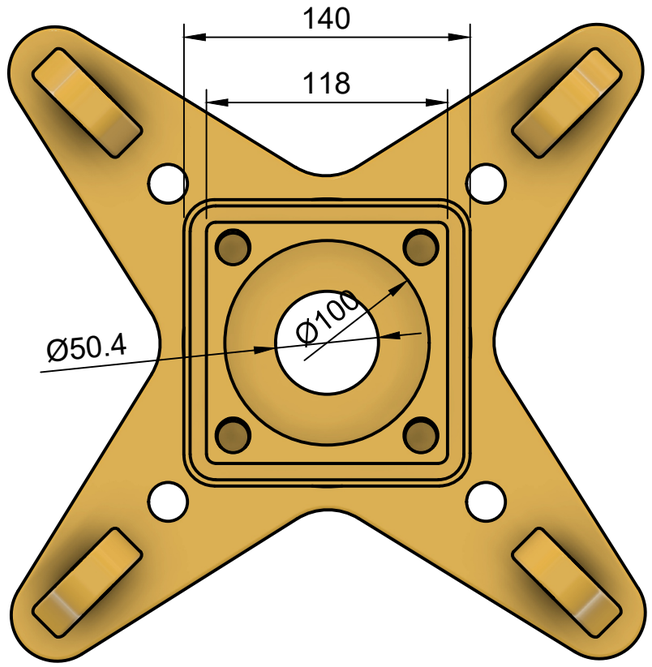

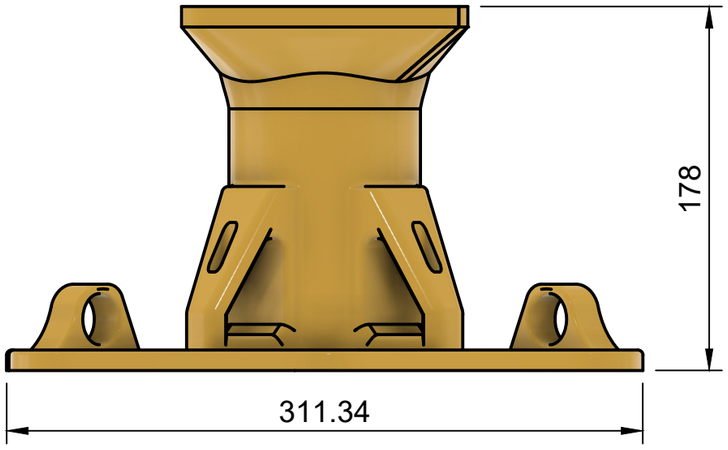

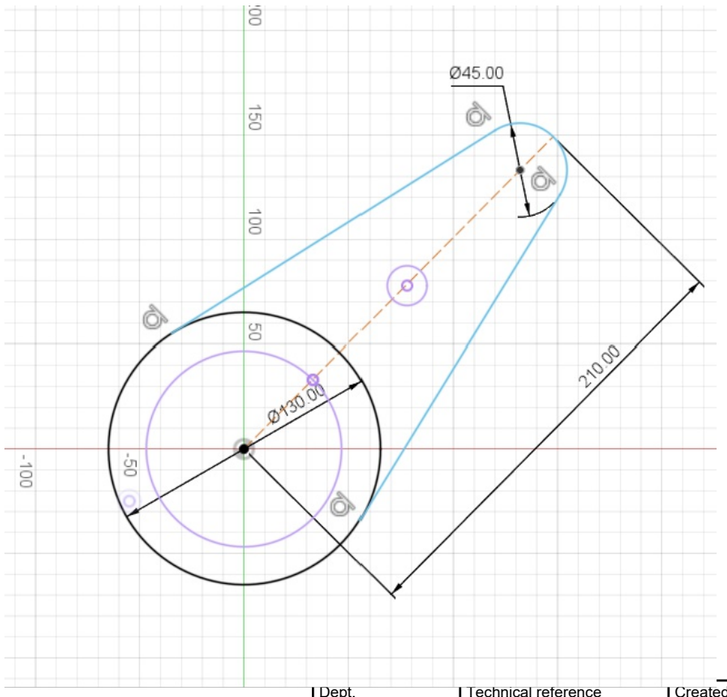

Dept.	Technical reference	Created by Ecosat 01/02/2026	Approved by
		Document type	Document status
		Title ECOBOYA Soporte central	DWG No.
			Rev. / Date of issue / Sheet 1/1